Micro Rivets

2 mm aluminum open end rivet designed for small micro-electronic applications.

Key features and benefits

- Smallest blind rivet available
- Suitable for tight places
- Accommodates very small holes
- Requires access to primary side only
- Very low secondary side clearance
- Low head height
- Soft set body will not damage work piece
- Ideal for thin metal and printed circuit boards

Specifications

Size:
.078" (2.0 mm)
Material:
Aluminum
Head Style:
Dome

Typical placing sequence

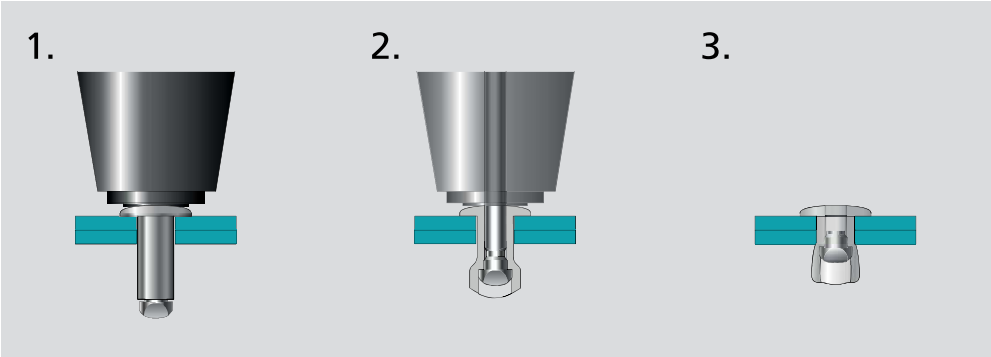

Please visit our website for fastener placing animations and technical data.

Assembly applications

- Electronic devices
- Telecommunications
- Vehicle electronics
- Entertainment systems

Electronics applications

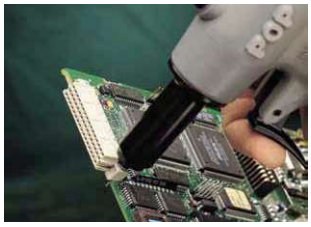

Computer and mobile devices

Car entertainment

Automotive electronics

Micro Rivets TAPD BS Series

Aluminum / Steel

English	Français	Deutsch	Italiano	Español
Dome head	Tête plate	Flachrundkopf	Testa Tonda	Cabeza alomada
Body: Aluminum* Natural	Corps: Aluminium* Brut	Hülse: Aluminium* Unbehandelt	Corpo: Alluminio* Nessuna finitura	Cuerpo: Aluminio* Natural
Stem: Steel Zinc plated	Tige: Acier Revêtement zingué	Dorn: Stahl Verzinkt	Gambo: Acciaio Zincato	Vástago: Acero Zincado

*: 5154

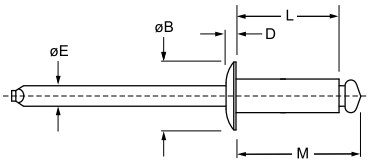

ø					L	M	øE	øB	D			Part No.
nom.	min.	max.	min.	max.	ref.	ref.	ref.	max.	max.	lbf *(kN)*[1]	lbf *(kN)*[1]	
	.0 *(0)*	.063 *(1.6)*			.161 *(4.1)*	.295 *(7.5)*						TAPD 20M1 BS
	.039 *(1.0)*	.126 *(3.2)*			.224 *(5.7)*	.358 *(9.1)*						TAPD 20M2 BS
.078 *(2.0)*	.126 *(3.2)*	.189 *(4.8)*	.080 *(2.03)*	.084 *(2.13)*	.291 *(7.4)*	.425 *(10.8)*	.043 *(1.1)*	.156 *(4.0)*	.029 *(0.8)*	*66* *(0.30)*	87 *(0.39)*	TAPD 20M3 BS
	.189 *(4.8)*	.252 *(6.4)*			.354 *(9.0)*	.488 *(12.4)*						TAPD 20M4 BS
	.252 *(6.4)*	.315 *(8.0)*			.421 *(10.7)*	.555 *(14.1)*						TAPD 20M5 BS

dimensions in inches and *(mm)* / en pouces et *(millimètre)* / alle Maße in Zoll und *(mm)* / in pollici e *(millimetri)* / en pulgadas y *(milímetros)*

1) typical values / valeurs moyennes / typische Werte / Valori tipici / valores típicos