Soft Set Rivets

Almost identical in appearance as the open end, this rivet is engineered with a soft aluminum alloy body and stem preventing installation fractures on brittle materials.

Key features and benefits

- Designed for soft or brittle materials
- Incorporates a special aluminum alloy
- Low clamping force

Specifications

Sizes:
.118" – 3/16"
(3.0 mm – 4.8 mm)
Materials:
Aluminum
Head Styles:
Dome, Countersunk

Typical placing sequence

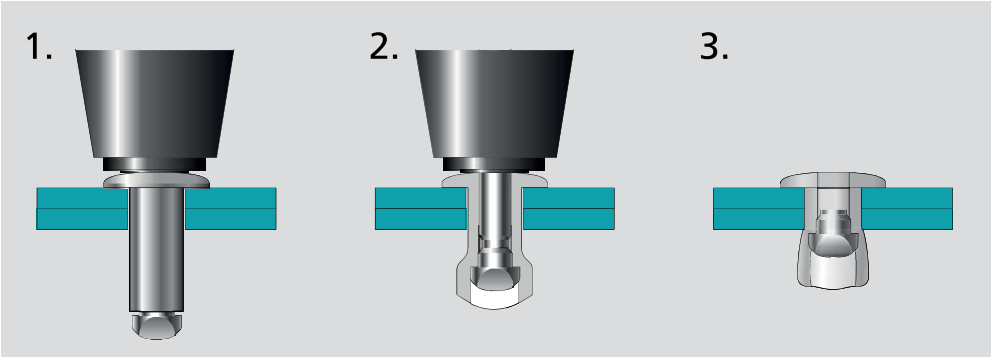

Please visit our website for fastener placing animations and technical data.

Assembly applications

- Office furniture
- Mobile homes, caravans
- Public transportation
- Plastic components
- Electrical engineering
- Lighting

Conference room furnishings

Plastic school chair

Recreational vehicle

Plastic valve

Angle section to PCB

Playground equipment

Soft Set PAD / PAK Series

Aluminum / Aluminum

English	Français	Deutsch	Italiano	Español
Body: Aluminum* Natural	Corps: Aluminium* Brut	Hülse: Aluminium* Blank	Corpo: Alluminio* Nessuna finitura	Cuerpo: Aluminio* Natural
Stem: Aluminum Natural	Tige: Aluminium Brut	Dorn: Aluminium Blank	Gambo: Alluminio Nessuna finitura	Vástago: Aluminio Natural

* 1100

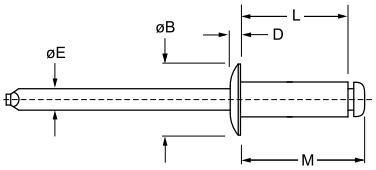

PAD ■ ABS
Dome head
Tête bombée / Flachrundkopf /
Testa tonda / Cabeza alomada

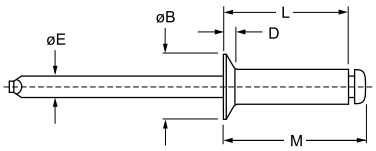

PAK ■ ABS
Countersunk
Tête fraisée / Senkkopf /
Testa svasata / Cabeza avellanada

ø nom.	min.	max.	min.	max.	L ref.	M ref.	øE ref.	lbf (kN)[1]	lbf (kN)[1]	PAD ■ ABS øB max.	PAD ■ ABS D max.	PAD ■ ABS Part No. ■	PAK ■ ABS øB max.	PAK ■ ABS D max.	PAK ■ ABS Part No. ■
.118" (3.0)	.126 (3.2)	.189 (4.8)	.120 (3.05)	.124 (3.15)	.315 (8.1)	.492 (12.5)	.071 (1.8)	69 (0.31)	94 (0.42)	.246 (6.3)	.043 (1.1)	30M3			
	.189 (4.8)	.252 (6.4)			.385 (9.8)	.559 (14.2)						30M4			
	.252 (6.4)	.315 (8.0)			.456 (11.6)	.630 (16.0)						30M5			
1/8" (3.2)	.032 (1.1)	.062 (1.6)	.129 (3.28)	.133 (3.38)	.188 (4.8)	.308 (7.8)	.076 (1.9)	65 (0.29)	85 (0.38)	.262 (6.7)	.040 (1.1)	41	.230 (5.9)	.051 (1.3)	
	.063 (1.6)	.125 (3.2)			.250 (6.4)	.370 (9.4)						42			42
	.126 (3.2)	.187 (4.8)			.313 (8.0)	.433 (11.0)						43			43
	.188 (4.8)	.250 (6.4)			.375 (9.5)	.495 (12.6)						44			44
	.251 (6.4)	.312 (7.9)			.438 (11.1)	.558 (14.2)						45			
	.313 (7.9)	.375 (9.5)			.500 (12.7)	.620 (15.8)						46			
5/32" (4.0)	.188 (4.8)	.250 (6.4)	.160 (4.06)	.164 (4.17)	.400 (10.2)	.540 (13.7)	.095 (2.4)	105 (0.47)	145 (0.65)	.328 (8.4)	.047 (1.2)	54			
	.251 (6.4)	.375 (9.5)			.525 (13.3)	.665 (16.9)						56			
3/16" (4.8)	.126 (3.2)	.250 (6.4)	.192 (4.88)	.196 (4.98)	.425 (10.8)	.585 (14.9)	.114 (2.9)	145 (0.65)	205 (0.91)	.393 (10.0)	.055 (1.4)	64			
	.251 (6.4)	.375 (9.5)			.550 (14.0)	.710 (18.0)						66			
	.376 (9.5)	.500 (12.7)			.675 (17.2)	.835 (21.2)						68			

dimensions in inches and *(mm)* / en pouces et *(millimètre)* / alle Maße in Zoll und *(mm)* / in pollici e *(millimetri)* / en pulgadas y *(milímetros)*
1) typical values / valeurs moyennes / typische Werte / Valori tipici / valores típicos